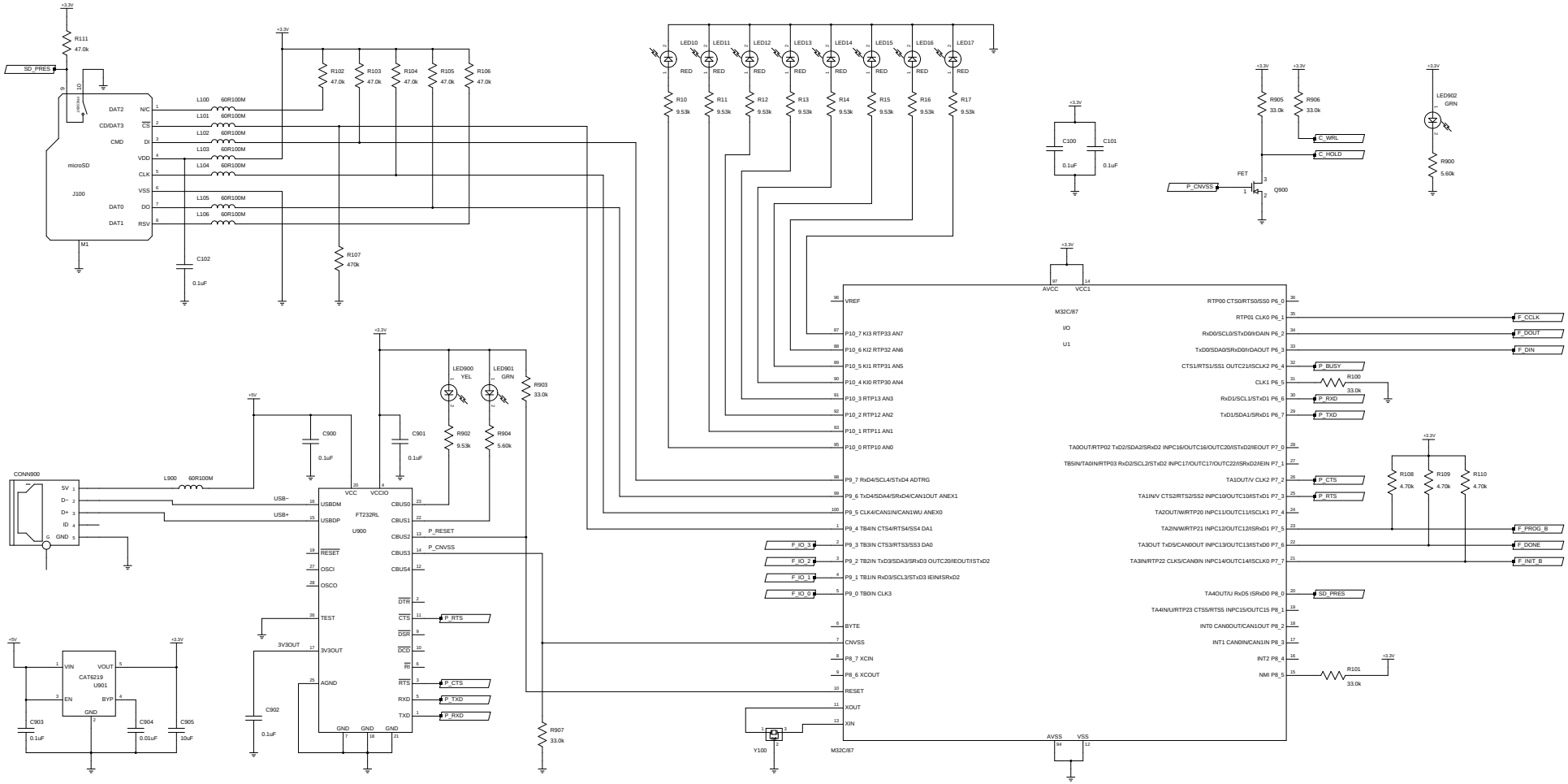
+3.3V
R111
47.0k
SD_PRES
microSD
J100
M1
DAT2
CD/DAT3
CMD
VDD
CLK
VSS
DAT0
DAT1
N/C
CS
DI
DO
RSV
L100 60R100M
L101 60R100M
L102 60R100M
L103 60R100M
L104 60R100M
L105 60R100M
L106 60R100M
C102
0.1uF
R102 47.0k
R103 47.0k
R104 47.0k
R105 47.0k
R106 47.0k
R107
470k
LED10 RED
LED11 RED
LED12 RED
LED13 RED
LED14 RED
LED15 RED
LED16 RED
LED17 RED
R10 9.53k
R11 9.53k
R12 9.53k
R13 9.53k
R14 9.53k
R15 9.53k
R16 9.53k
R17 9.53k
C100
C101
0.1uF
0.1uF
R905 33.0k
R906 33.0k
C_WRL
C_HOLD
P_CNVSS
FET
Q900
LED902
GRN
R900
5.60k
M32C/87
I/O
U1
AVCC
VCC1
VREF
P10_7 KI3 RTP33 AN7
P10_6 KI2 RTP32 AN6
P10_5 KI1 RTP31 AN5
P10_4 KI0 RTP30 AN4
P10_3 RTP13 AN3
P10_2 RTP12 AN2
P10_1 RTP11 AN1
P10_0 RTP10 AN0
P9_7 RxD4/SCL4/STxD4 ADTRG
P9_6 TxD4/SDA4/SRxD4/CAN1OUT ANEX1
P9_5 CLK4/CAN1IN/CAN1WU ANEX0
P9_4 TB4IN CTS4/RTS4/SS4 DA1
P9_3 TB3IN CTS3/RTS3/SS3 DA0
P9_2 TB2IN TxD3/SDA3/SRxD3 OUTC20/IEOUTI/STxD2
P9_1 TB1IN RxD3/SCL3/STxD3 IEIN/SRxD2
P9_0 TB0IN CLK3
F_IO_3
F_IO_2
F_IO_1
F_IO_0
BYTE
CNVSS
P8_7 XCIN
P8_6 XCOUT
RESET
XOUT
XIN
Y100
AVSS
VSS
RTP00 CTS0/RTS0/SS0 P6_0
RTP01 CLK0 P6_1
RxD0/SCL0/STxD0/IrDAIN P6_2
TxD0/SDA0/SRxD0/IrDAOUT P6_3
CTS1/RTS1/SS1 OUTC21/ISCLK2 P6_4
CLK1 P6_5
RxD1/SCL1/STxD1 P6_6
TxD1/SDA1/SRxD1 P6_7
TA0OUT/RTP02 TxD2/SDA2/SRxD2 INPC16/OUTC16/OUTC20/ISTxD2/IEOUT P7_0
TB5IN/TA0IN/RTP03 RxD2/SCL2/STxD2 INPC17/OUTC17/OUTC22/ISRxD2/IEIN P7_1
TA1OUT/V CLK2 P7_2
TA1IN/V CTS2/RTS2/SS2 INPC10/OUTC10/ISTxD1 P7_3
TA2OUT/W/RTP20 INPC11/OUTC11/ISCLK1 P7_4
TA2IN/W/RTP21 INPC12/OUTC12/ISRxD1 P7_5
TA3OUT TxD5/CAN0OUT INPC13/OUTC13/STxD0 P7_6
TA3IN/RTP22 CLK5/CAN0IN INPC14/OUTC14/ISCLK0 P7_7
TA4OUT/U RxD5 ISRxD0 P8_0
TA4IN/U/RTP23 CTS5/RTS5 INPC15/OUTC15 P8_1
INT0 CAN0OUT/CAN1OUT P8_2
INT1 CAN0IN/CAN1IN P8_3
INT2 P8_4
NMI P8_5
F_CCLK
F_DOUT
F_DIN
P_BUSY
R100
33.0k
P_RXD
P_TXD
P_CTS
P_RTS
R108 4.70k
R109 4.70k
R110 4.70k
F_PROG_B
F_DONE
F_INIT_B
SD_PRES
R101
33.0k
LED900 YEL
LED901 GRN
R903 33.0k
R902 9.53k
R904 5.60k
+5V
C900
0.1uF
C901
0.1uF
CONN900
L900 60R100M
SV
D−
D+
ID
GND
USB−
USB+
FT232RL
U900
VCC
VCCIO
USBDM
USBDP
RESET
OSCI
OSCO
TEST
3V3OUT
AGND
CBUS0
CBUS1
CBUS2
CBUS3
CBUS4
P_RESET
P_CNVSS
DTR
CTS
DSR
DCD
RI
RTS
RXD
TXD
P_RTS
P_CTS
P_TXD
P_RXD
GND
C902
0.1uF
R907
33.0k
CAT6219
U901
VIN
VOUT
EN
BYP
C903
0.1uF
C904
0.01uF
C905
10uF

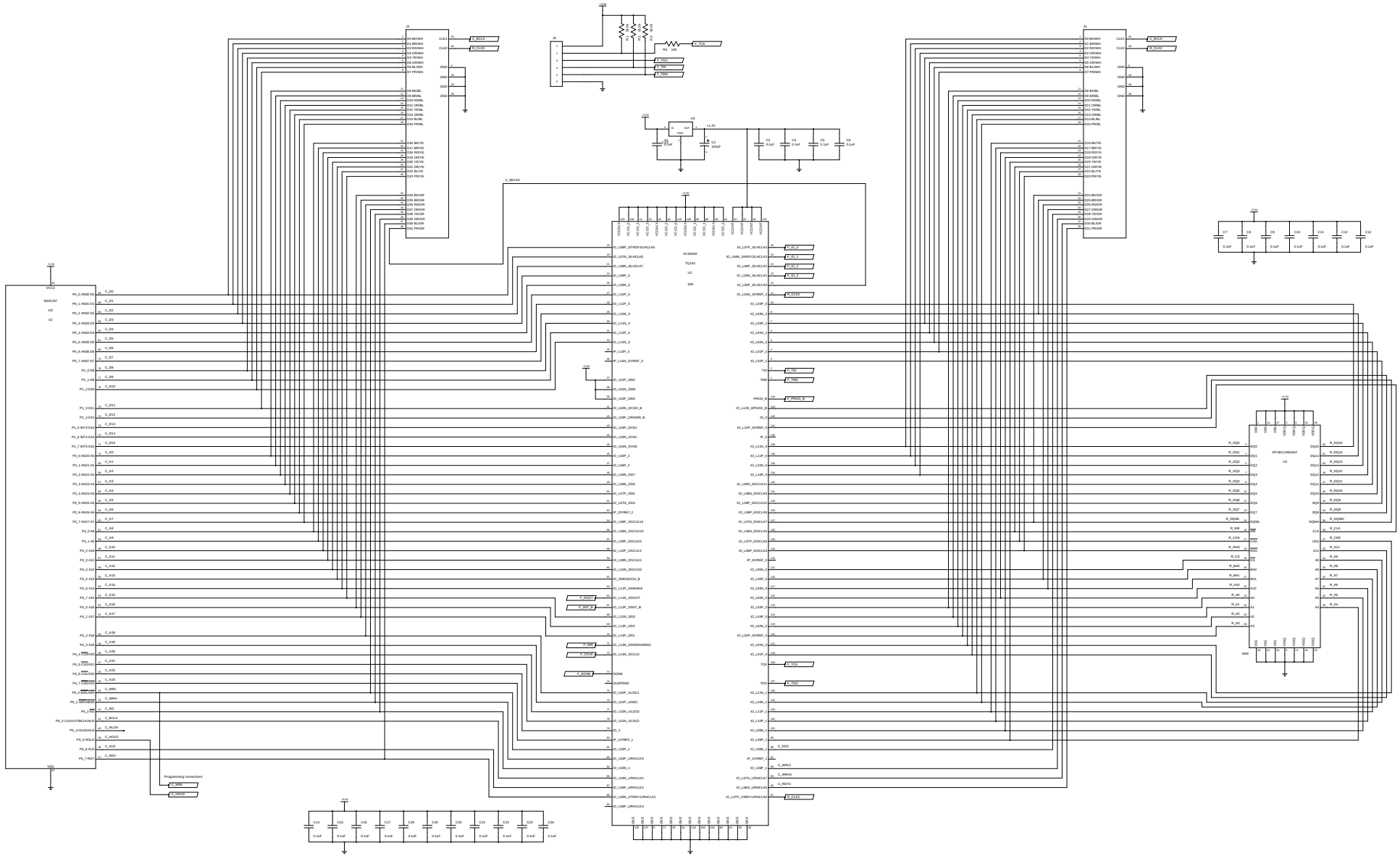

J3
J4
J5
U1
U2
U3
U5
XC3S50A
TQ144
MT48LC4M16A2
Programming connections