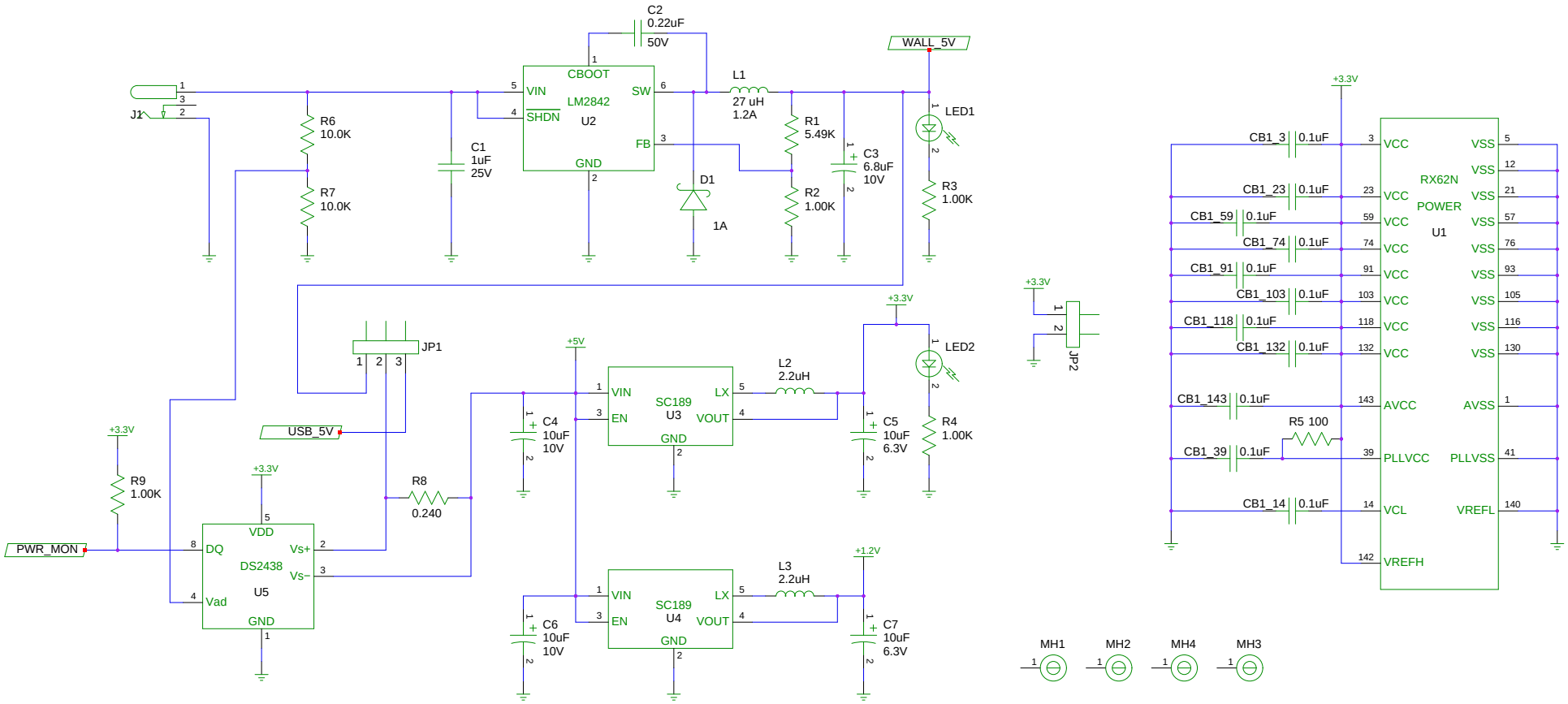
C2
0.22uF
50V
CBOOT
VIN
SHDN
LM2842
U2
SW
FB
GND
L1
27 uH
1.2A
WALL_5V
LED1
J1
R6
10.0K
R7
10.0K
C1
1uF
25V
D1
1A
R1
5.49K
R2
1.00K
C3
6.8uF
10V
R3
1.00K
JP1
USB_5V
+3.3V
R9
1.00K
PWR_MON
VDD
DQ
Vs+
Vs−
DS2438
U5
Vad
GND
R8
0.240
+5V
C4
10uF
10V
VIN
EN
SC189
U3
LX
VOUT
GND
L2
2.2uH
C5
10uF
6.3V
LED2
R4
1.00K
C6
10uF
10V
SC189
U4
L3
2.2uH
+1.2V
C7
10uF
6.3V
JP2
CB1_3
CB1_23
CB1_59
CB1_74
CB1_91
CB1_103
CB1_118
CB1_132
CB1_143
CB1_39
CB1_14
0.1uF
R5 100
VCC
AVCC
PLLVCC
VCL
VREFH
RX62N
POWER
U1
VSS
AVSS
PLLVSS
VREFL
MH1
MH2
MH4
MH3

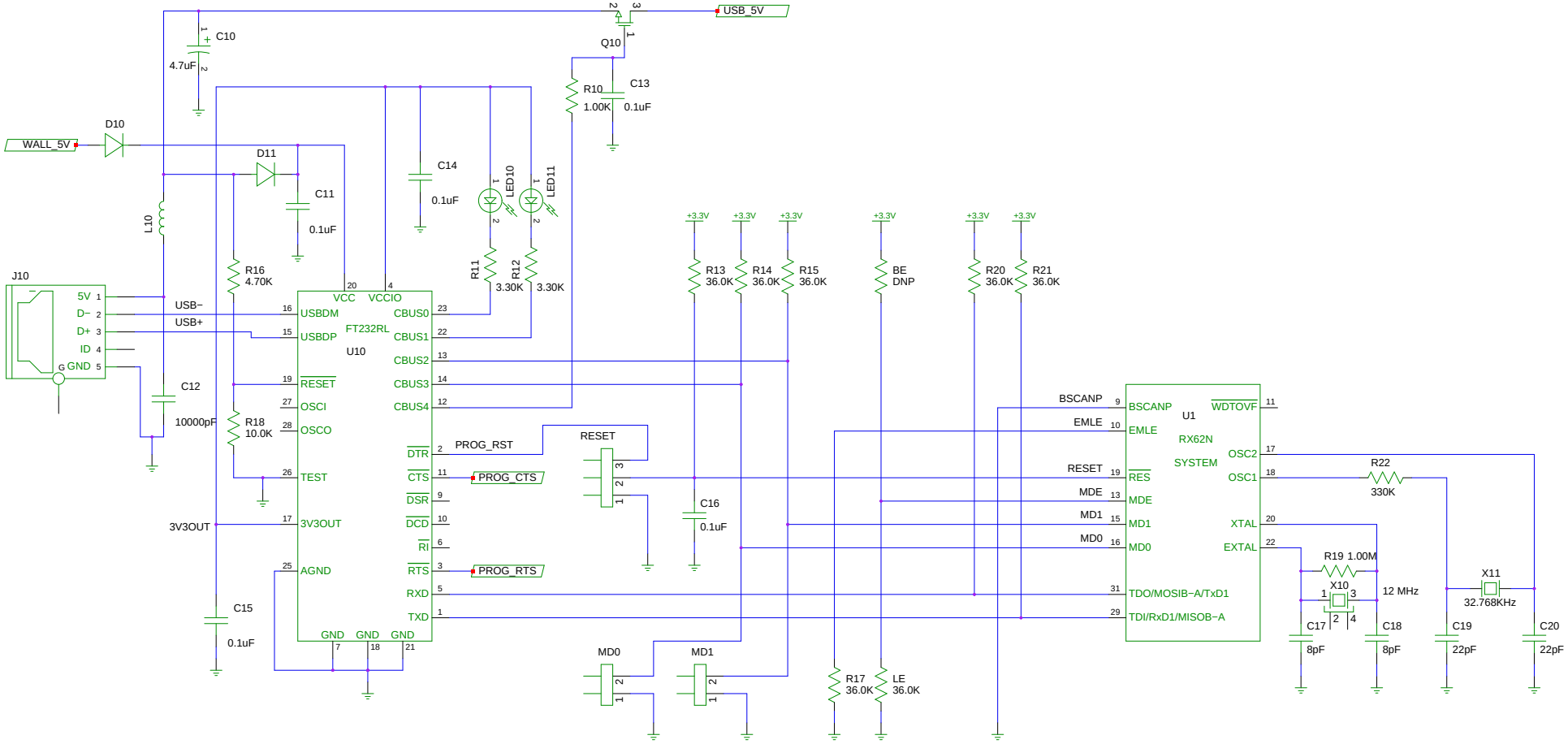
USB_5V
Q10
C10
4.7uF
R10
1.00K
C13
0.1uF
WALL_5V
D10
D11
C11
0.1uF
C14
0.1uF
LED10
LED11
L10
R11
3.30K
R12
3.30K
J10
5V
D−
D+
ID
GND
USB−
USB+
C12
10000pF
R16
4.70K
R18
10.0K
3V3OUT
C15
0.1uF
VCC
VCCIO
USBDM
USBDP
FT232RL
U10
RESET
OSCI
OSCO
TEST
3V3OUT
AGND
GND
CBUS0
CBUS1
CBUS2
CBUS3
CBUS4
DTR
CTS
DSR
DCD
RI
RTS
RXD
TXD
PROG_RST
PROG_CTS
PROG_RTS
RESET
MD0
MD1
+3.3V
R13
36.0K
R14
36.0K
R15
36.0K
C16
0.1uF
BE
DNP
R17
36.0K
LE
36.0K
R20
36.0K
R21
36.0K
BSCANP
EMLE
RESET
MDE
MD1
MD0
U1
RX62N
SYSTEM
BSCANP
EMLE
RES
MDE
MD1
MD0
TDO/MOSIB−A/TxD1
TDI/RxD1/MISOB−A
WDTOVF
OSC2
OSC1
XTAL
EXTAL
R22
330K
R19 1.00M
X10
12 MHz
C17
8pF
C18
8pF
X11
32.768KHz
C19
22pF
C20
22pF

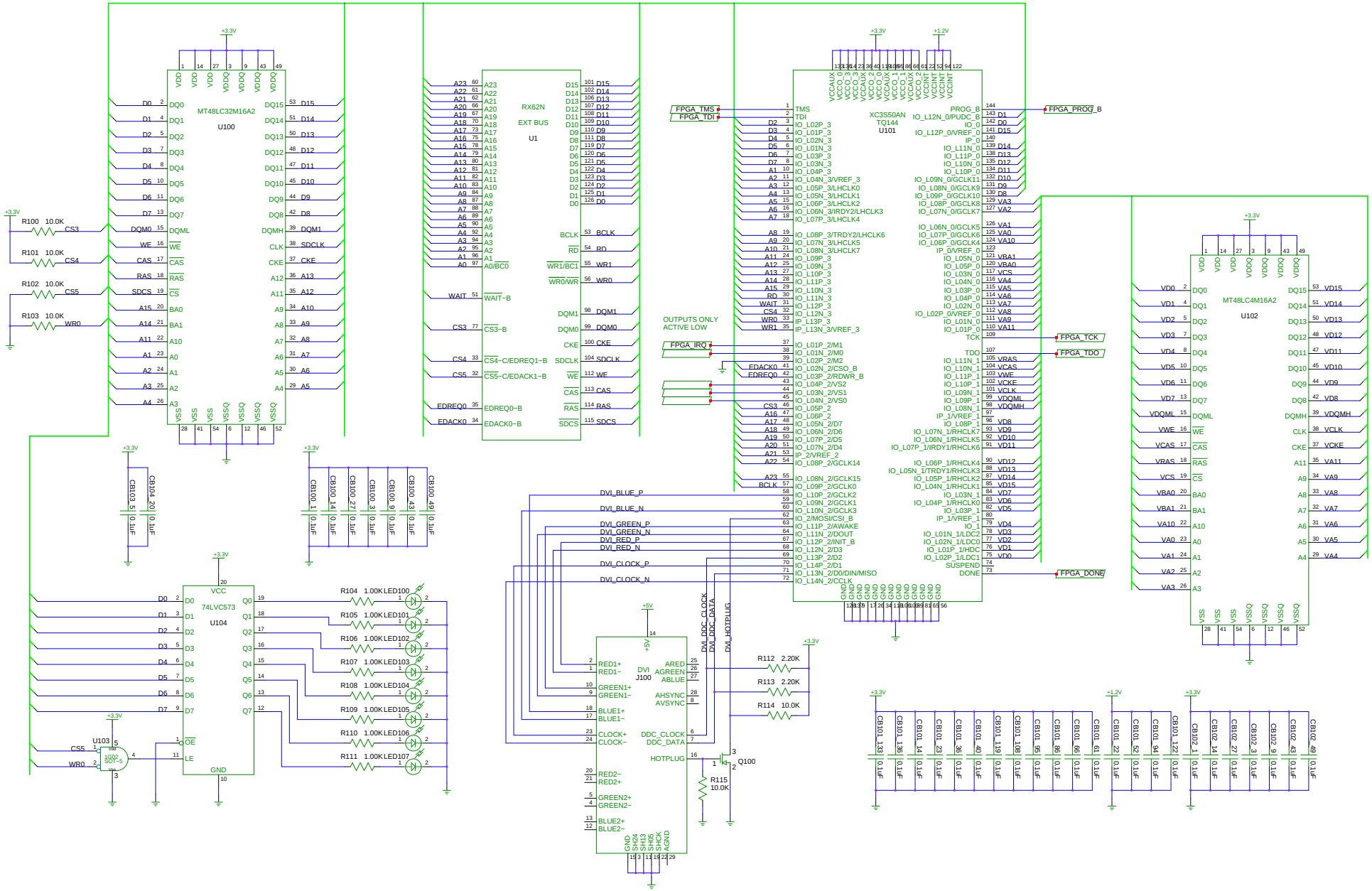
MT48LC32M16A2
U100
RX62N
EXT BUS
U1
XC3S50AN
TQ144
U101
MT48LC4M16A2
U102
74LVC573
U104
DVI
J100
R100 10.0K CS3
R101 10.0K CS4
R102 10.0K CS5
R103 10.0K WR0
FPGA_TMS
FPGA_TDI
FPGA_PROG_B
FPGA_TCK
FPGA_TDO
FPGA_IRQ
FPGA_DONE
OUTPUTS ONLY
ACTIVE LOW
DVI_BLUE_P
DVI_BLUE_N
DVI_GREEN_P
DVI_GREEN_N
DVI_RED_P
DVI_RED_N
DVI_CLOCK_P
DVI_CLOCK_N
DVI_DDC_CLOCK
DVI_DDC_DATA
DVI_HOTPLUG
R112 2.20K
R113 2.20K
R114 10.0K
R115 10.0K
Q100

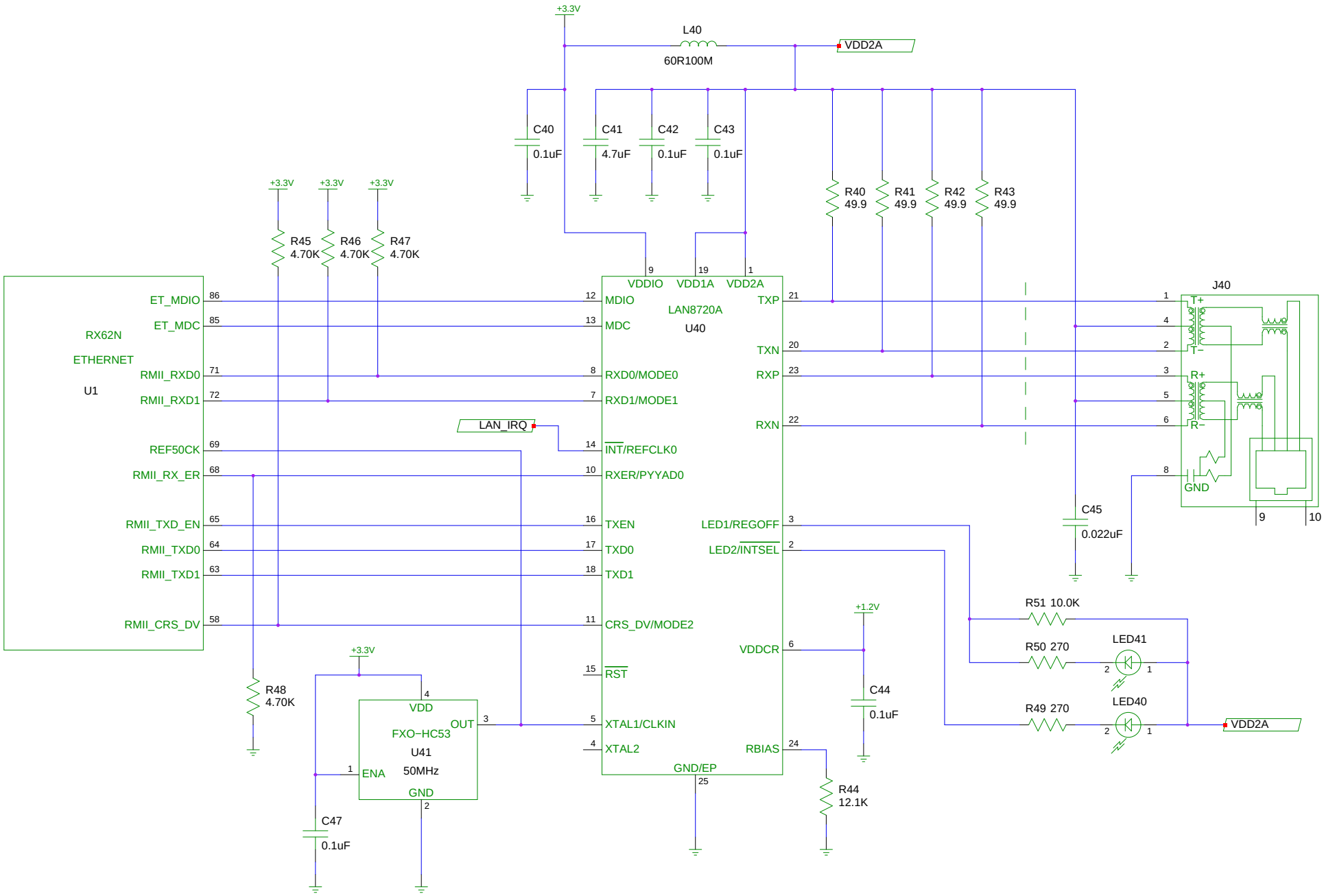
+3.3V
L40
60R100M
VDD2A
C40
0.1uF
C41
4.7uF
C42
0.1uF
C43
0.1uF
R40
49.9
R41
49.9
R42
49.9
R43
49.9
R45
4.70K
R46
4.70K
R47
4.70K
RX62N
ETHERNET
U1
ET_MDIO
ET_MDC
RMII_RXD0
RMII_RXD1
REF50CK
RMII_RX_ER
RMII_TXD_EN
RMII_TXD0
RMII_TXD1
RMII_CRS_DV
VDDIO
VDD1A
VDD2A
MDIO
MDC
LAN8720A
U40
RXD0/MODE0
RXD1/MODE1
LAN_IRQ
INT/REFCLK0
RXER/PYYAD0
TXEN
TXD0
TXD1
CRS_DV/MODE2
RST
XTAL1/CLKIN
XTAL2
GND/EP
TXP
TXN
RXP
RXN
LED1/REGOFF
LED2/INTSEL
VDDCR
RBIAS
J40
T+
T−
R+
R−
GND
C45
0.022uF
R51 10.0K
R50 270
R49 270
LED41
LED40
+1.2V
C44
0.1uF
R44
12.1K
R48
4.70K
VDD
OUT
FXO−HC53
U41
50MHz
ENA
GND
C47
0.1uF

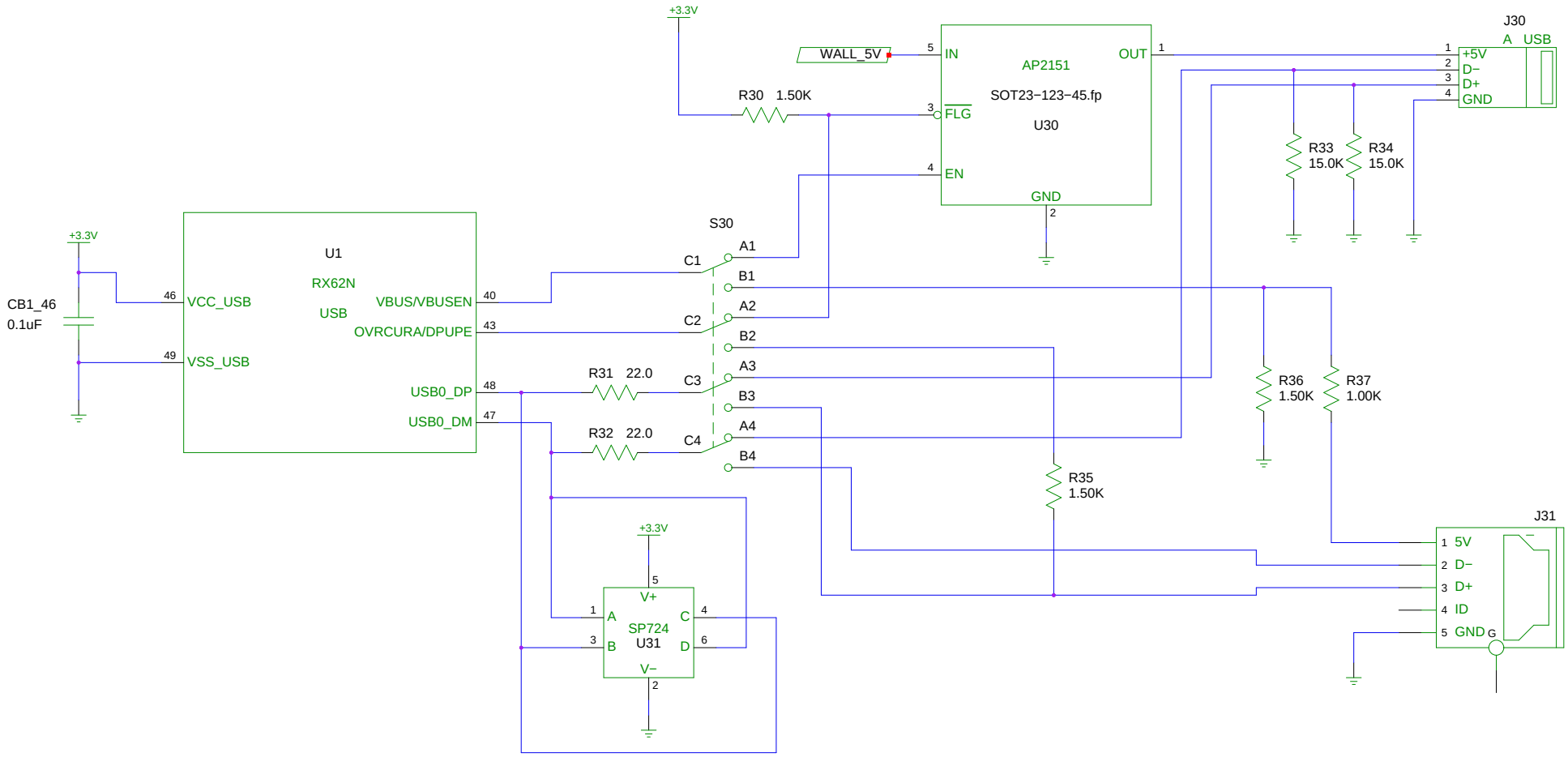
+3.3V
WALL_5V
5
IN
AP2151
OUT
1
SOT23−123−45.fp
R30 1.50K
3
FLG
U30
4
EN
GND
2
J30
A USB
1 +5V
2 D−
3 D+
4 GND
R33
15.0K
R34
15.0K
+3.3V
CB1_46
0.1uF
46
VCC_USB
U1
RX62N
USB
VBUS/VBUSEN
40
49
VSS_USB
OVRCURA/DPUPE
43
USB0_DP
48
USB0_DM
47
S30
C1
C2
C3
C4
A1
B1
A2
B2
A3
B3
A4
B4
R31 22.0
R32 22.0
R35
1.50K
R36
1.50K
R37
1.00K
J31
1 5V
2 D−
3 D+
4 ID
5 GND
G
+3.3V
5
V+
1
A
3
B
SP724
U31
C
4
D
6
V−
2

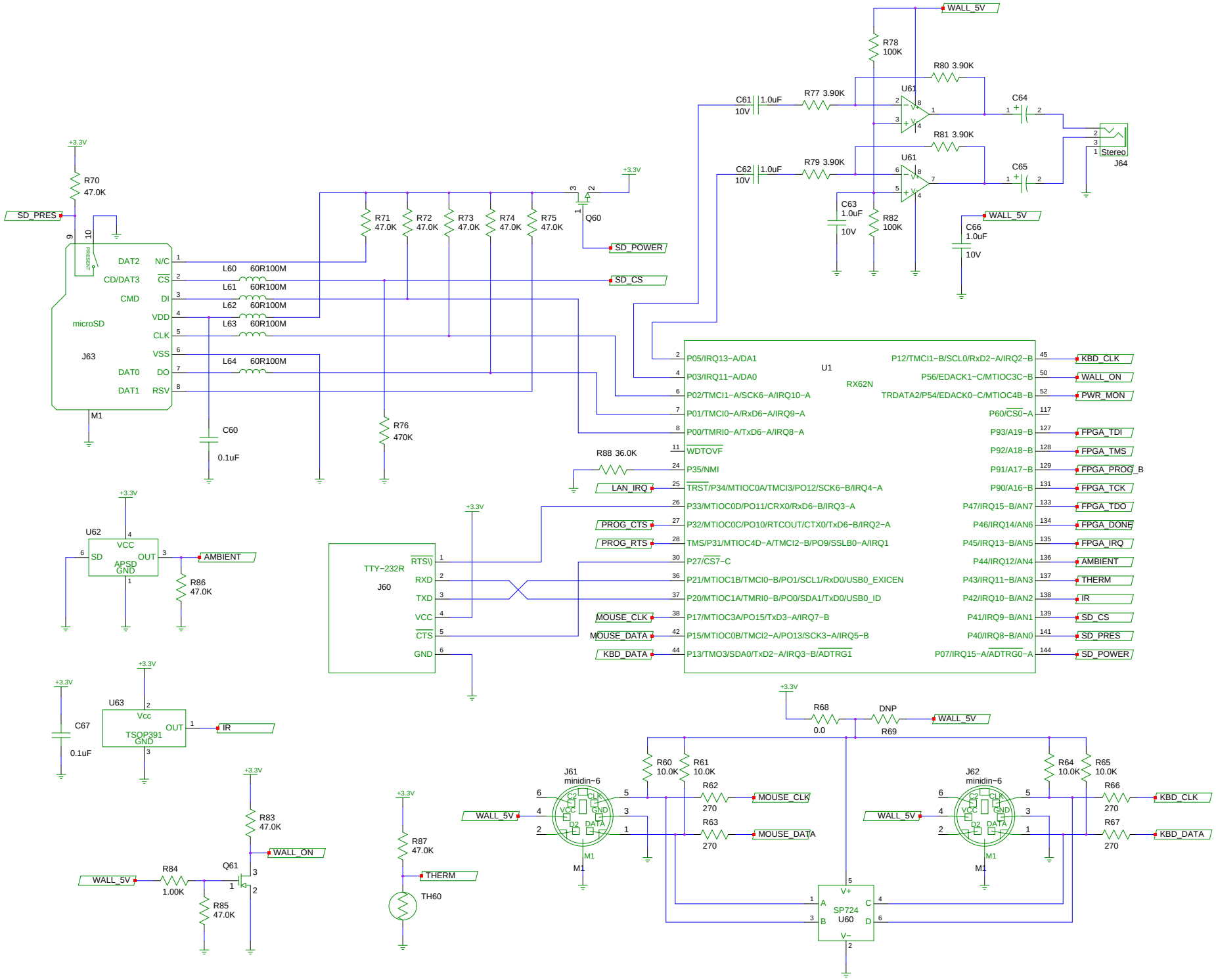
WALL_5V
R78 100K
R80 3.90K
U61
C61 1.0uF 10V
R77 3.90K
C64
Stereo
J64
R81 3.90K
U61
C62 1.0uF 10V
R79 3.90K
C65
C63 1.0uF 10V
R82 100K
WALL_5V
C66 1.0uF 10V
+3.3V
R70 47.0K
SD_PRES
PRESENT
DAT2 N/C
CD/DAT3 CS
CMD DI
VDD
microSD
CLK
VSS
DAT0 DO
DAT1 RSV
J63
M1
L60 60R100M
L61 60R100M
L62 60R100M
L63 60R100M
L64 60R100M
R71 47.0K
R72 47.0K
R73 47.0K
R74 47.0K
R75 47.0K
Q60
SD_POWER
SD_CS
C60 0.1uF
R76 470K
U1
RX62N
P05/IRQ13−A/DA1
P03/IRQ11−A/DA0
P02/TMCI1−A/SCK6−A/IRQ10−A
P01/TMCI0−A/RxD6−A/IRQ9−A
P00/TMRI0−A/TxD6−A/IRQ8−A
WDTOVF
P35/NMI
TRST/P34/MTIOC0A/TMCI3/PO12/SCK6−B/IRQ4−A
P33/MTIOC0D/PO11/CRX0/RxD6−B/IRQ3−A
P32/MTIOC0C/PO10/RTCOUT/CTX0/TxD6−B/IRQ2−A
TMS/P31/MTIOC4D−A/TMCI2−B/PO9/SSLB0−A/IRQ1
P27/CS7−C
P21/MTIOC1B/TMCI0−B/PO1/SCL1/RxD0/USB0_EXICEN
P20/MTIOC1A/TMRI0−B/PO0/SDA1/TxD0/USB0_ID
P17/MTIOC3A/PO15/TxD3−A/IRQ7−B
P15/MTIOC0B/TMCI2−A/PO13/SCK3−A/IRQ5−B
P13/TMO3/SDA0/TxD2−A/IRQ3−B/ADTRG1
P12/TMCI1−B/SCL0/RxD2−A/IRQ2−B
P56/EDACK1−C/MTIOC3C−B
TRDATA2/P54/EDACK0−C/MTIOC4B−B
P60/CS0−A
P93/A19−B
P92/A18−B
P91/A17−B
P90/A16−B
P47/IRQ15−B/AN7
P46/IRQ14/AN6
P45/IRQ13−B/AN5
P44/IRQ12/AN4
P43/IRQ11−B/AN3
P42/IRQ10−B/AN2
P41/IRQ9−B/AN1
P40/IRQ8−B/AN0
P07/IRQ15−A/ADTRG0−A
KBD_CLK
WALL_ON
PWR_MON
FPGA_TDI
FPGA_TMS
FPGA_PROG_B
FPGA_TCK
FPGA_TDO
FPGA_DONE
FPGA_IRQ
AMBIENT
THERM
IR
SD_CS
SD_PRES
SD_POWER
R88 36.0K
LAN_IRQ
PROG_CTS
PROG_RTS
MOUSE_CLK
MOUSE_DATA
KBD_DATA
U62
VCC
SD
OUT
APSD
GND
AMBIENT
R86 47.0K
TTY−232R
J60
RTS
RXD
TXD
VCC
CTS
GND
U63
Vcc
TSOP391
OUT
GND
C67 0.1uF
IR
R68 0.0
DNP
R69
WALL_5V
R60 10.0K
R61 10.0K
J61 minidin−6
R62 270
MOUSE_CLK
R63 270
MOUSE_DATA
R64 10.0K
R65 10.0K
J62 minidin−6
R66 270
KBD_CLK
R67 270
KBD_DATA
SP724 U60
V+
V−
R83 47.0K
WALL_ON
Q61
R84 1.00K
R85 47.0K
R87 47.0K
TH60