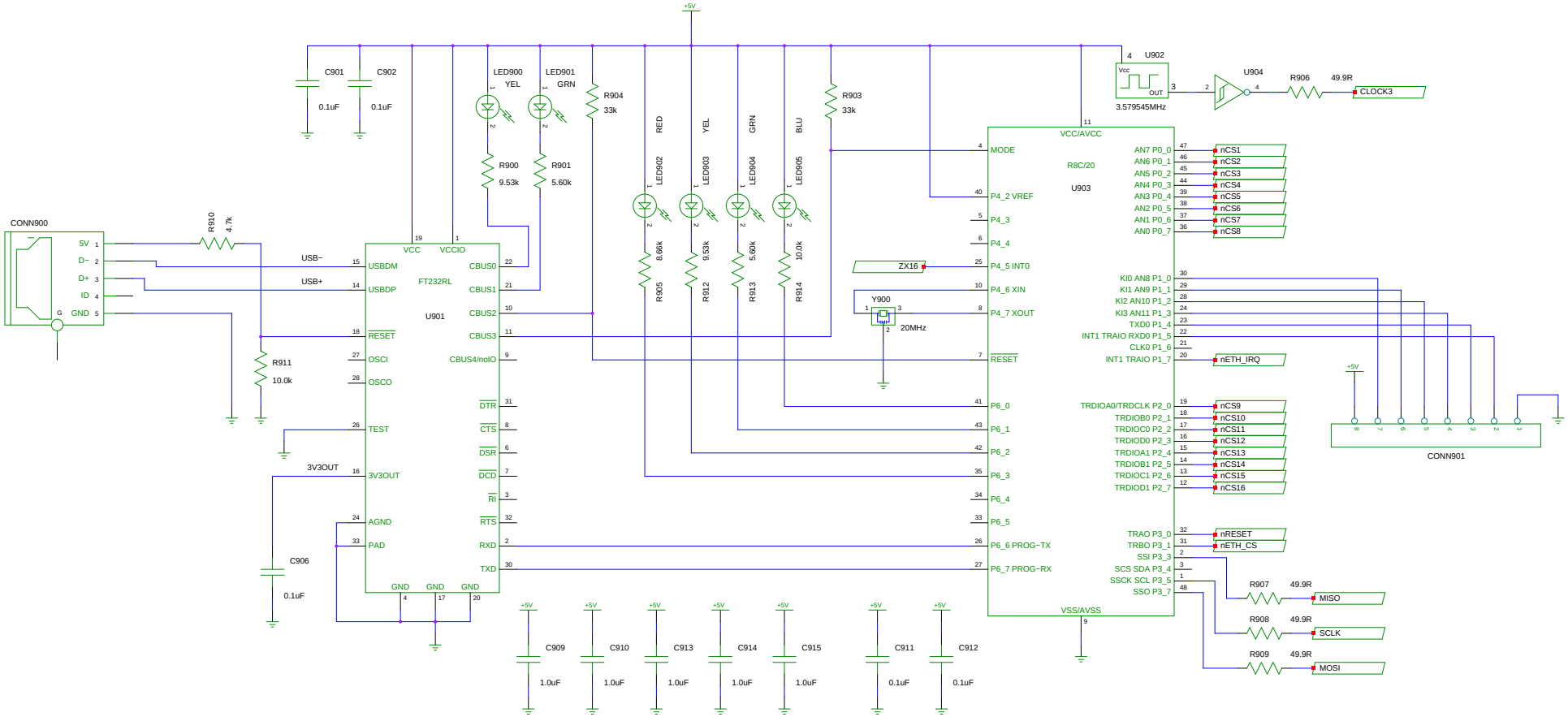
CONN900
5V
D−
D+
ID
GND
G
R910
4.7k
R911
10.0k
USB−
USB+
C901
0.1uF
C902
0.1uF
LED900
YEL
LED901
GRN
R900
9.53k
R901
5.60k
R904
33k
R903
33k
LED902
RED
LED903
YEL
LED904
GRN
LED905
BLU
R905
8.66k
R912
9.53k
R913
5.60k
R914
10.0k
+5V
VCC
VCCIO
FT232RL
U901
USBDM
USBDP
RESET
OSCI
OSCO
TEST
3V3OUT
AGND
PAD
CBUS0
CBUS1
CBUS2
CBUS3
CBUS4/nolO
DTR
CTS
DSR
DCD
RI
RTS
RXD
TXD
GND
3V3OUT
C906
0.1uF
C909
1.0uF
C910
1.0uF
C913
1.0uF
C914
1.0uF
C915
1.0uF
C911
0.1uF
C912
0.1uF
U902
Vcc
OUT
3.579545MHz
U904
R906
49.9R
CLOCK3
VCC/AVCC
R8C/20
U903
MODE
P4_2 VREF
P4_3
P4_4
P4_5 INT0
P4_6 XIN
P4_7 XOUT
RESET
P6_0
P6_1
P6_2
P6_3
P6_4
P6_5
P6_6 PROG−TX
P6_7 PROG−RX
VSS/AVSS
ZX16
Y900
20MHz
AN7 P0_0
AN6 P0_1
AN5 P0_2
AN4 P0_3
AN3 P0_4
AN2 P0_5
AN1 P0_6
AN0 P0_7
nCS1
nCS2
nCS3
nCS4
nCS5
nCS6
nCS7
nCS8
KI0 AN8 P1_0
KI1 AN9 P1_1
KI2 AN10 P1_2
KI3 AN11 P1_3
TXD0 P1_4
INT1 TRAIO RXD0 P1_5
CLK0 P1_6
INT1 TRAIO P1_7
nETH_IRQ
TRDIOA0/TRDCLK P2_0
TRDIOB0 P2_1
TRDIOC0 P2_2
TRDIOD0 P2_3
TRDIOA1 P2_4
TRDIOB1 P2_5
TRDIOC1 P2_6
TRDIOD1 P2_7
nCS9
nCS10
nCS11
nCS12
nCS13
nCS14
nCS15
nCS16
TRAO P3_0
TRBO P3_1
SSI P3_3
SCS SDA P3_4
SSCK SCL P3_5
SSO P3_7
nRESET
nETH_CS
R907
49.9R
MISO
R908
49.9R
SCLK
R909
49.9R
MOSI
CONN901

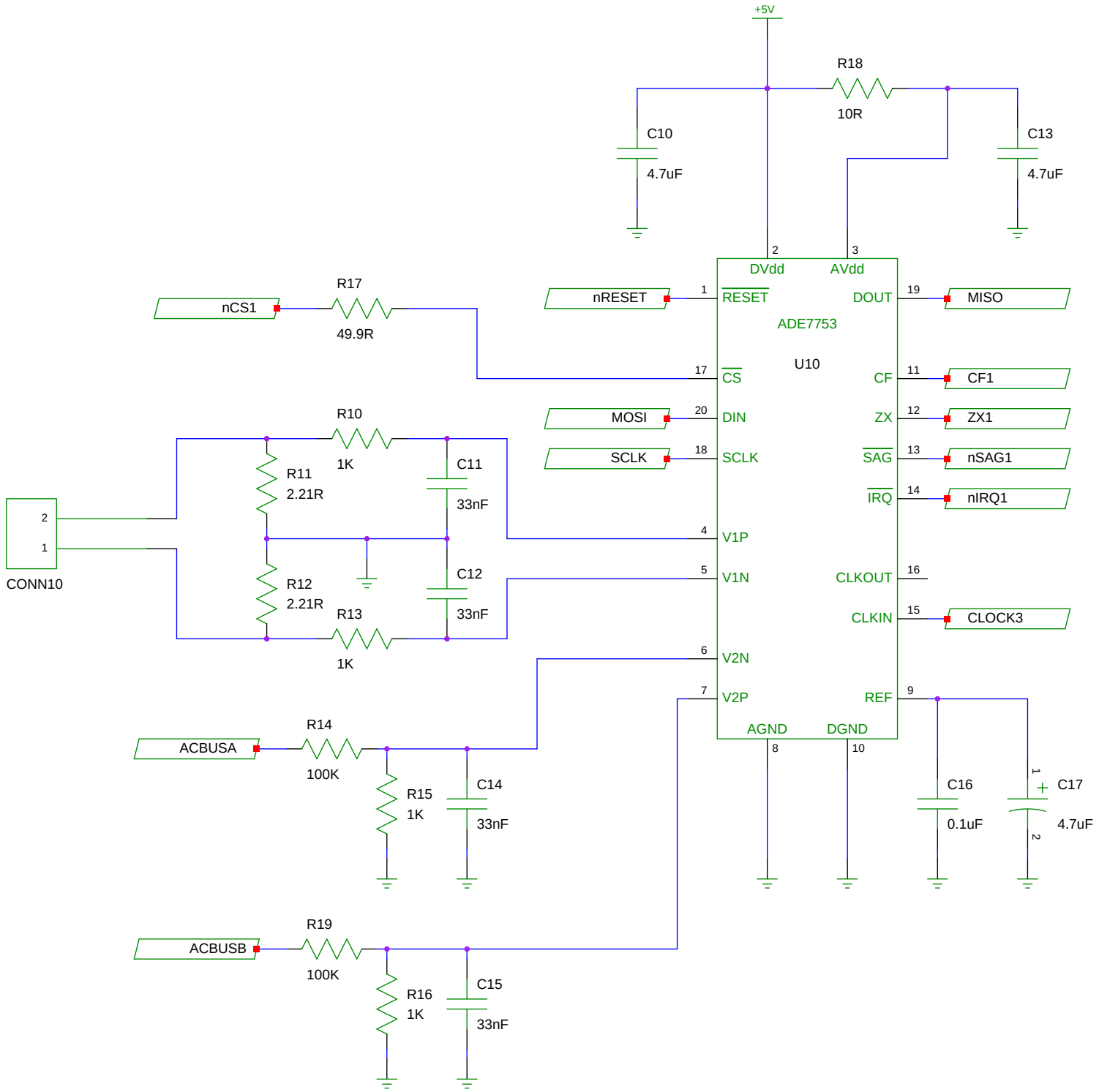
+5V
R18
10R
C10
4.7uF
C13
4.7uF
2
3
DVdd
AVdd
nRESET
1
RESET
DOUT
19
MISO
ADE7753
U10
nCS1
R17
49.9R
17
CS
CF
11
CF1
MOSI
20
DIN
ZX
12
ZX1
SCLK
18
SCLK
SAG
13
nSAG1
IRQ
14
nIRQ1
R10
1K
R11
2.21R
C11
33nF
2
1
CONN10
4
V1P
5
V1N
CLKOUT
16
R12
2.21R
C12
33nF
R13
1K
CLKIN
15
CLOCK3
6
V2N
7
V2P
REF
9
AGND
DGND
8
10
R14
ACBUSA
100K
R15
1K
C14
33nF
C16
0.1uF
1
C17
4.7uF
2
R19
ACBUSB
100K
R16
1K
C15
33nF

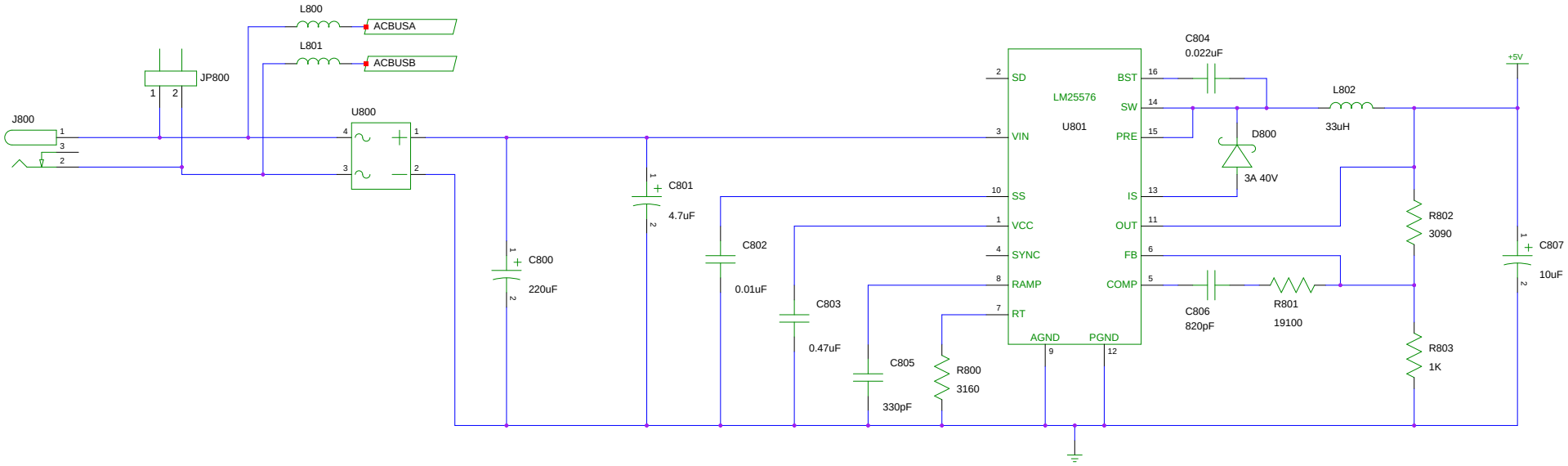
L800
ACBUSA
L801
ACBUSB
JP800
1
2
J800
1
3
2
U800
4
1
3
2
C800
220uF
C801
4.7uF
C802
0.01uF
C803
0.47uF
C805
330pF
R800
3160
LM25576
U801
SD
VIN
SS
VCC
SYNC
RAMP
RT
AGND
PGND
BST
SW
PRE
IS
OUT
FB
COMP
C804
0.022uF
D800
3A 40V
L802
33uH
C806
820pF
R801
19100
R802
3090
R803
1K
+5V
C807
10uF

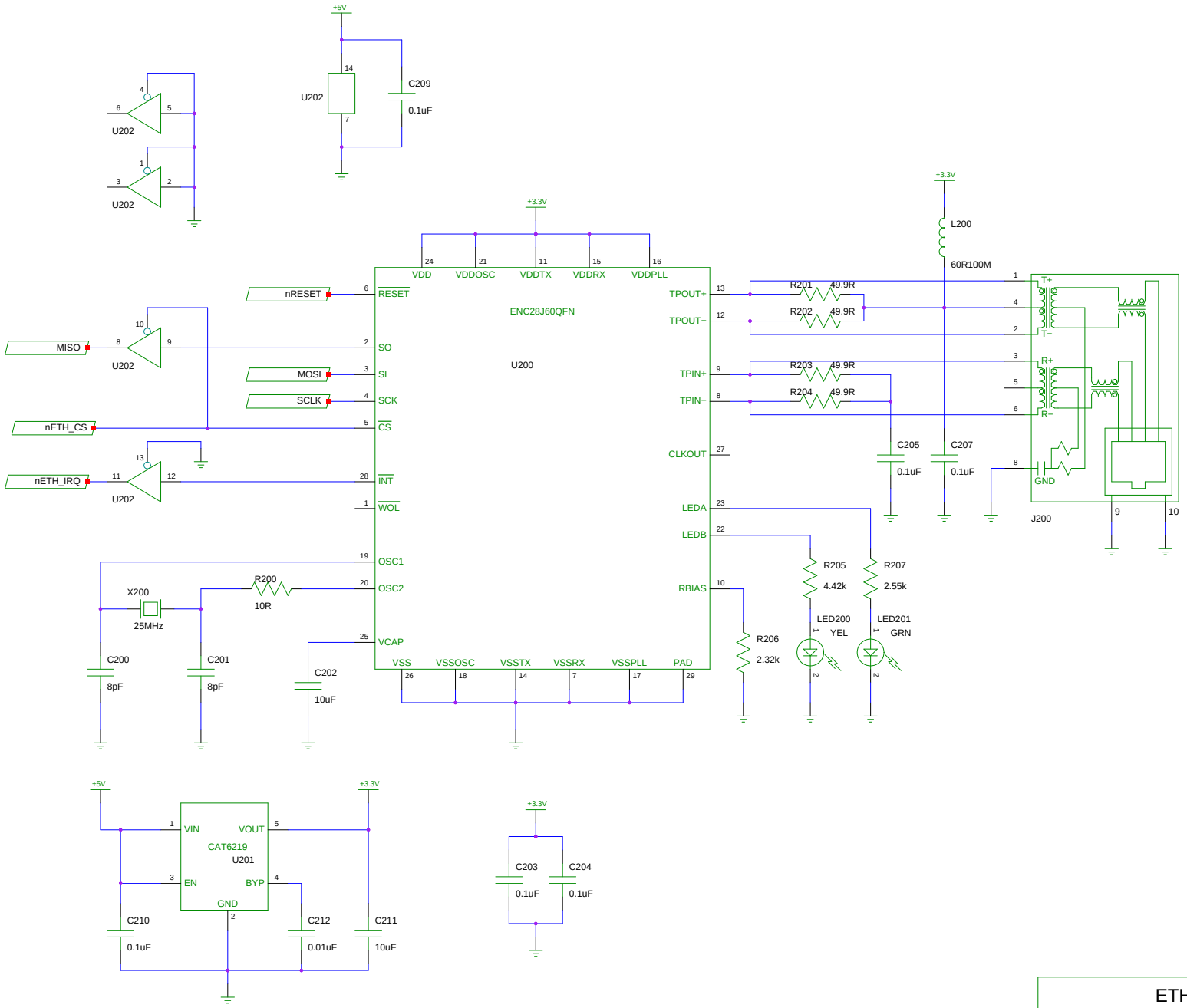

ETHERNET	
Page 2 of 4	DJ Delorie