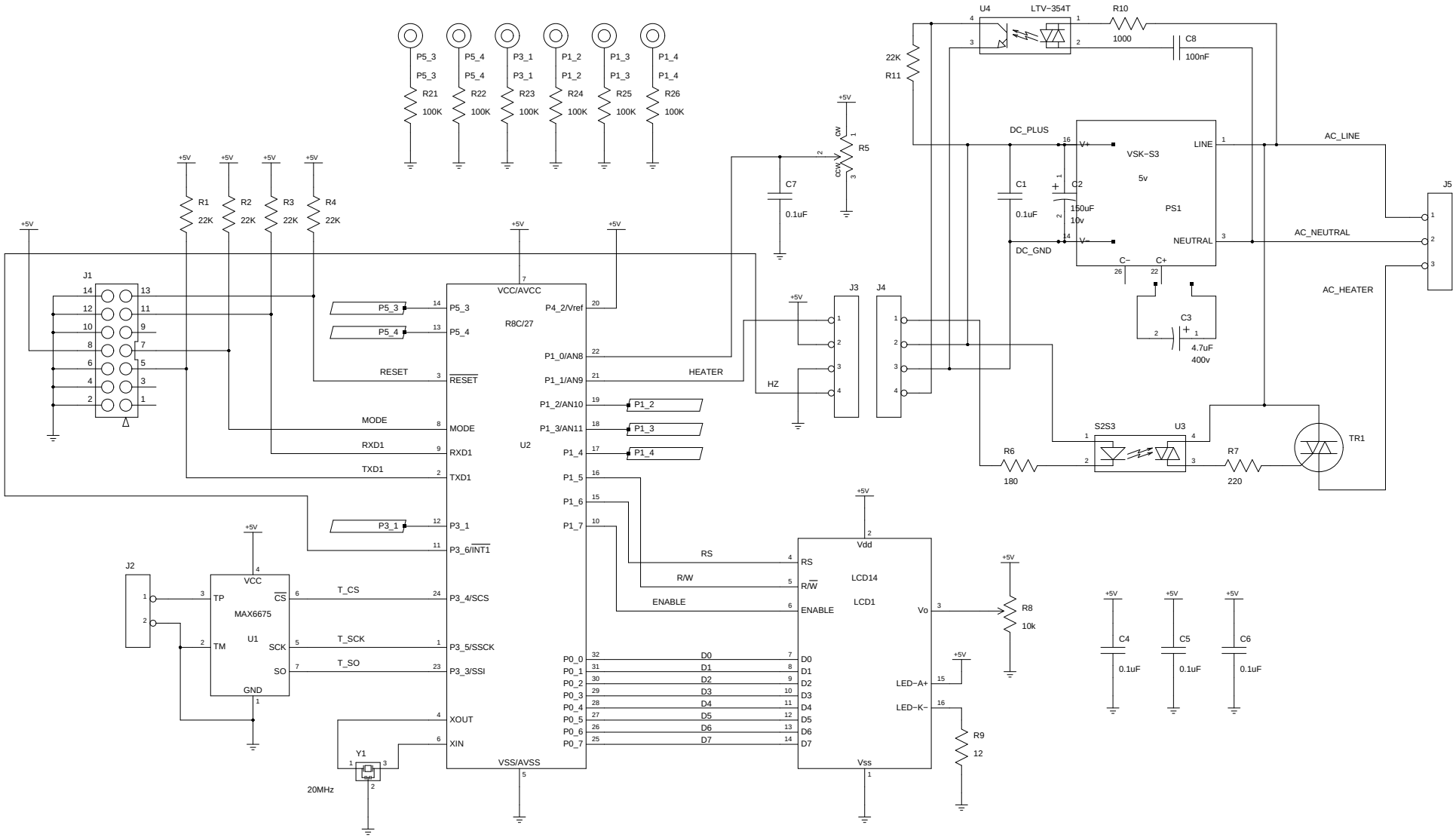
P5_3
P5_3
R21
100K
P5_4
P5_4
R22
100K
P3_1
P3_1
R23
100K
P1_2
P1_2
R24
100K
P1_3
P1_3
R25
100K
P1_4
P1_4
R26
100K
+5V
R1
22K
R2
22K
R3
22K
R4
22K
J1
C7
0.1uF
R5
CW
CCW
U4
LTV−354T
R10
1000
C8
100nF
22K
R11
DC_PLUS
DC_GND
VSK−S3
5v
PS1
LINE
NEUTRAL
V+
V−
C1
0.1uF
C2
150uF
10v
C−
C+
C3
4.7uF
400v
AC_LINE
AC_NEUTRAL
AC_HEATER
J5
VCC/AVCC
R8C/27
U2
P5_3
P5_4
RESET
MODE
RXD1
TXD1
P3_1
P3_6/INT1
P4_2/Vref
P1_0/AN8
P1_1/AN9
P1_2/AN10
P1_3/AN11
P1_4
P1_5
P1_6
P1_7
HEATER
HZ
J3
J4
S2S3
U3
R6
180
R7
220
TR1
J2
VCC
TP
TM
CS
SCK
SO
GND
MAX6675
U1
T_CS
T_SCK
T_SO
P3_4/SCS
P3_5/SSCK
P3_3/SSI
XOUT
XIN
Y1
20MHz
VSS/AVSS
P0_0
P0_1
P0_2
P0_3
P0_4
P0_5
P0_6
P0_7
D0
D1
D2
D3
D4
D5
D6
D7
RS
R/W
ENABLE
Vdd
LCD14
LCD1
Vo
LED−A+
LED−K−
Vss
R8
10k
R9
12
C4
0.1uF
C5
0.1uF
C6
0.1uF